PN: NK-QMAJ-50

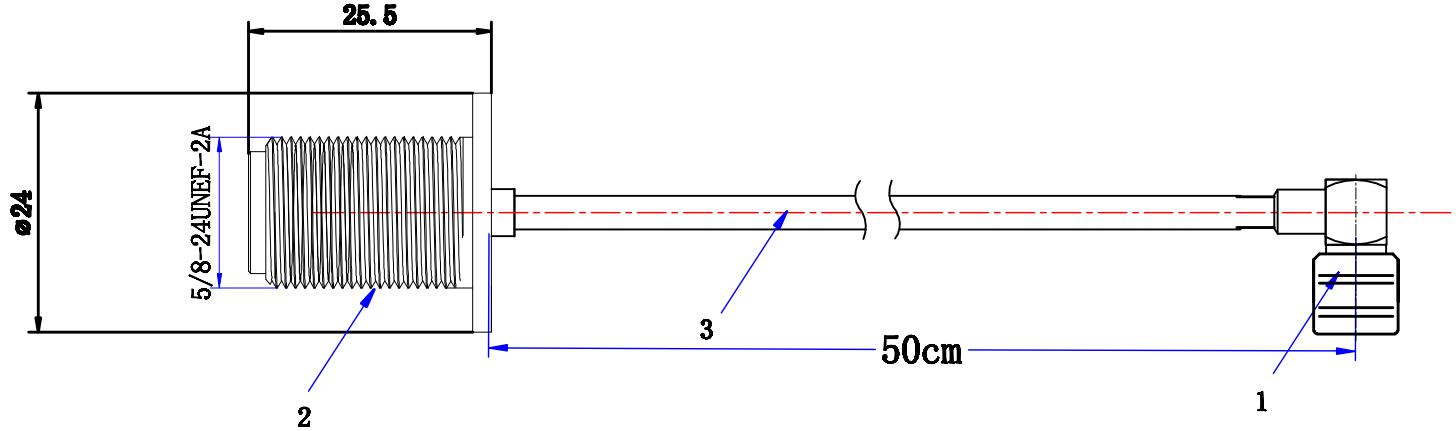

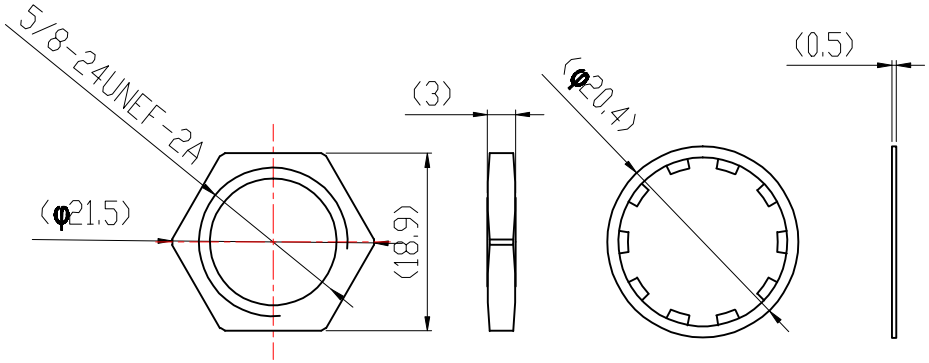

NO	DESCRIPTTION	MATERIAL	FINISH	QTY
3	Cable	RG402	blue	1
2	N Female	Brass	CuSnZn	1
1	QMA Male Right Angle	Brass	CuSnZn	1

Specificattions:

1、Impedance:50Ohms;

2、Frequency Range:0~6G

0-3GHzVSWR≤1.2;

3-6GHzVSWR≤1.5

3、Wogking Voltage:500V rms@sea level。

4、Insulation Resistance:5000 Ohms min

5、.PIM≤-120dBc

6 ROSH

RRG-402 Patch Cable N Female to QMA Male Right Angle Low PIM 50cm

0 1:1

1 1